NRG PROCESS SOLUTIONS

UT CORROSION SURVEY

CAPE YARD & THOMAS CHADWICK FARM

Project #B07014
May 24, 2019

UT Glossary

AVG - Average of the 6 low ultrasonic thickness readings recorded.

BAND - The area continuously scanned for ultrasonic thickness readings. Bands on vessels are permanently marked with a numbered tag and strip for future surveys. Piping bands are permanently marked with a numbered tag.

BRACKETS- Brackets indicates backside of component.

C.A.– PIPING Piping Corrosion Allowance shall be assumed to ASTM Spec. of 12.5% mill tolerance unless other wise provided or stated by the client.

C.A.– VESSEL Vessel Corrosion Allowance as stated on data plate or supplied by client. If no corrosion allowance for a vessel is provided 0.00" will be assumed.

E-FACTOR - Joint Efficiency Factor shall be assumed to be 1 (as scans do not transverse joints) unless requested otherwise by the client.

LT LOSS - Long Term Loss. Calculates material loss per year using current and baseline year. A minimum of 2 surveys at different dates are required for this calculation.

MIN - Minimum ultrasonic thickness reading obtained for a band.

MATERIAL-VESSEL The material as stated on the data plate. If no material data is available one will be assumed and the comment "material assumed" will be stated on the report.

MATERIAL-PIPING The material stamped in fitting or pipe. If no material data is available one will be assumed. Fitting material shall be assumed to SA 234-WPB and seamless pipe material shall be is assumed to SA 106-B unless otherwise requested by the client.

NOMINAL The designed or stated original thickness of a material or component.

OD - The stated or measured outside diameter of the component.

RETIREMENT-DATE Retirement date is recommended at the estimated date the component with T-min using the long term corrosion rate.

ST LOSS - Short Term Loss. Calculates material loss per year using current and previous year. A minimum of 2 surveys at different dates are required for this calculation.

SCANNING - U.T. Band shall be scanned continuously. The band shall be split in to 6 sections and the lowest reading from each section recorded. All scans shall originate from the number tag.

SPEC. - The code or spec. for the component. Vessels shall be assumed to ASME Sec VIII, Div 1 and piping shall be assumed to ASME B.31.3 unless otherwise requested by the client.

T-MIN - Thickness minimum is an ASME calculated value of the critical minimum thickness for internal pressure.

Note: All measures in this report are in Imperial Units

THE FOLLOWING IS AN ***INTERPRETATION*** OF THE ULTRASONIC DATA
FURTHER EVALUATION MAY BE REQUIRED

Ace Ultrasound Reporting Ltd. provides interpretive statistical data based on information supplied by third party technicians. Ace Ultrasound Reporting Ltd. disclaims any responsibility or liability arising from interpretations or decisions based on the information contained in this report.

HUNT INSPECTION LTD.

STEPHEN KEELEY
SNT UT. MT. PT LEVEL II
CGSB 48.9712 UT, MT LEVEL II
#12288

Signature:

Nondestructive examinations for this project have been completed by the following technician,
And to the best of his knowledge, accurate at the time of inspections:

HUNT INSPECTION LTD.

Equipment Used by Stephen Keeley
Panametrics EPOCH XT SN# 101319002
Stresstel 0° - 5.0 MHz x 1/4" Dual Crystal Probe SN# 16K01R9R
Panametrics Dual Cable SN# BCMD-316-5B
1018 Steel .100" to .500" Step Wedge SN# 2604 11
1018 Steel .250" to 1.000" Step Wedge SN# 0434 12
Sonotech UT-X Couplant 62-005 11162 G

NRG PROCESS SOLUTIONS
ULTRASONIC CORROSION SURVEY SUMMARY

SUMMARY DATA FOR JOB# B07014							
Date:	**LSD:**	**Drawing#:**	**Vessel Name:**	**Regulatory#:**	**Serial:**	**Readings 25% Below Nominal**	**Readings Below Nominal T-Min**
19.May.24	00-00-000-00W0M	10	Pressure Tank	A0541531	25539	0	0
19.May.24	00-00-000-00W0M	11	Vertical Sand Filter	A0642034	ZR-112-11	0	0
19.May.24	00-00-000-00W0M	12	Vertical Sand Filter	A0642033	ZR-111-11	0	0
19.May.24	00-00-000-00W0M	13	Vertical Sand Filter	A0642032	ZR-114-12	0	0
19.May.24	00-00-000-00W0M	14	Vertical Sand Filter	A0544169	ZR-103-10	0	0
19.May.24	00-00-000-00W0M	15	Vertical Sand Filter	A0627713	ZR-110-11	0	0
19.May.24	00-00-000-00W0M	16	Pressure Tank	A0415414	02875	0	0
19.May.24	00-00-000-00W0M	17	Black Hurst Tank 6'x13	-		0	0
19.May.24	00-00-000-00W0M	18	Flare Knockout Drum	-	0100228DA	0	0

NRG PROCESS SOLUTIONS
ULTRASONIC CORROSION SURVEY SUMMARY COMMENTS

SUMMARY VESSEL COMMENTS FOR JOB# B07014					
LSD:	**Drawing#:**	**Vessel Name:**	**Regulatory#:**	**Serial:**	**Comments**
00-00-000-00W0M	10	Pressure Tank	A0541531	25539	
00-00-000-00W0M	11	Vertical Sand Filter	A0642034	ZR-112-11	
00-00-000-00W0M	12	Vertical Sand Filter	A0642033	ZR-111-11	
00-00-000-00W0M	13	Vertical Sand Filter	A0642032	ZR-114-12	
00-00-000-00W0M	14	Vertical Sand Filter	A0544169	ZR-103-10	
00-00-000-00W0M	15	Vertical Sand Filter	A0627713	ZR-110-11	
00-00-000-00W0M	16	Pressure Tank	A0415414	02875	
00-00-000-00W0M	17	Black Hurst Tank 6'x13	-		NO DATA PLATE ALL DATA ASSUMED
00-00-000-00W0M	18	Flare Knockout Drum	-	0100228DA	

NRG PROCESS SOLUTIONS
ULTRASONIC CORROSION SURVEY SUMMARY COMMENTS

SUMMARY COMMENTS FOR JOB# B07014							
Date	LSD:	Drawing#:	TML#:	Vessel Name:	Regulatory#:	Serial:	Comments
19.May.24	00-00-000-00W0M	10	05	Pressure Tank	A0541531	25539	
19.May.24	00-00-000-00W0M	10	10	Pressure Tank	A0541531	25539	
19.May.24	00-00-000-00W0M	10	15	Pressure Tank	A0541531	25539	
19.May.24	00-00-000-00W0M	10	20	Pressure Tank	A0541531	25539	
19.May.24	00-00-000-00W0M	10	25	Pressure Tank	A0541531	25539	
19.May.24	00-00-000-00W0M	10	30	Pressure Tank	A0541531	25539	
19.May.24	00-00-000-00W0M	10	35	Pressure Tank	A0541531	25539	
19.May.24	00-00-000-00W0M	10	40	Pressure Tank	A0541531	25539	
19.May.24	00-00-000-00W0M	10	45	Pressure Tank	A0541531	25539	
19.May.24	00-00-000-00W0M	10	50	Pressure Tank	A0541531	25539	WALL LOSS
19.May.24	00-00-000-00W0M	10	55	Pressure Tank	A0541531	25539	
19.May.24	00-00-000-00W0M	10	60	Pressure Tank	A0541531	25539	WALL LOSS
19.May.24	00-00-000-00W0M	10	65	Pressure Tank	A0541531	25539	
19.May.24	00-00-000-00W0M	10	70	Pressure Tank	A0541531	25539	
19.May.24	00-00-000-00W0M	10	75	Pressure Tank	A0541531	25539	
19.May.24	00-00-000-00W0M	10	80	Pressure Tank	A0541531	25539	WALL LOSS
19.May.24	00-00-000-00W0M	10	85	Pressure Tank	A0541531	25539	
19.May.24	00-00-000-00W0M	10	90	Pressure Tank	A0541531	25539	
19.May.24	00-00-000-00W0M	11	05	Vertical Sand Filter	A0642034	ZR-112-11	
19.May.24	00-00-000-00W0M	11	10	Vertical Sand Filter	A0642034	ZR-112-11	
19.May.24	00-00-000-00W0M	11	15	Vertical Sand Filter	A0642034	ZR-112-11	

NRG PROCESS SOLUTIONS
ULTRASONIC CORROSION SURVEY SUMMARY COMMENTS

SUMMARY COMMENTS FOR JOB# B07014							
Date	**LSD:**	**Drawing#:**	**TML#:**	**Vessel Name:**	**Regulatory#:**	**Serial:**	**Comments**
19.May.24	00-00-000-00W0M	11	20	Vertical Sand Filter	A0642034	ZR-112-11	
19.May.24	00-00-000-00W0M	11	25	Vertical Sand Filter	A0642034	ZR-112-11	
19.May.24	00-00-000-00W0M	11	30	Vertical Sand Filter	A0642034	ZR-112-11	
19.May.24	00-00-000-00W0M	11	35	Vertical Sand Filter	A0642034	ZR-112-11	
19.May.24	00-00-000-00W0M	11	40	Vertical Sand Filter	A0642034	ZR-112-11	
19.May.24	00-00-000-00W0M	11	45	Vertical Sand Filter	A0642034	ZR-112-11	
19.May.24	00-00-000-00W0M	11	50	Vertical Sand Filter	A0642034	ZR-112-11	
19.May.24	00-00-000-00W0M	12	05	Vertical Sand Filter	A0642033	ZR-111-11	
19.May.24	00-00-000-00W0M	12	10	Vertical Sand Filter	A0642033	ZR-111-11	
19.May.24	00-00-000-00W0M	12	15	Vertical Sand Filter	A0642033	ZR-111-11	
19.May.24	00-00-000-00W0M	12	20	Vertical Sand Filter	A0642033	ZR-111-11	
19.May.24	00-00-000-00W0M	12	25	Vertical Sand Filter	A0642033	ZR-111-11	
19.May.24	00-00-000-00W0M	12	30	Vertical Sand Filter	A0642033	ZR-111-11	
19.May.24	00-00-000-00W0M	12	35	Vertical Sand Filter	A0642033	ZR-111-11	
19.May.24	00-00-000-00W0M	12	40	Vertical Sand Filter	A0642033	ZR-111-11	
19.May.24	00-00-000-00W0M	12	45	Vertical Sand Filter	A0642033	ZR-111-11	
19.May.24	00-00-000-00W0M	12	50	Vertical Sand Filter	A0642033	ZR-111-11	
19.May.24	00-00-000-00W0M	13	05	Vertical Sand Filter	A0642032	ZR-114-12	
19.May.24	00-00-000-00W0M	13	10	Vertical Sand Filter	A0642032	ZR-114-12	
19.May.24	00-00-000-00W0M	13	15	Vertical Sand Filter	A0642032	ZR-114-12	
19.May.24	00-00-000-00W0M	13	20	Vertical Sand Filter	A0642032	ZR-114-12	

NRG PROCESS SOLUTIONS
ULTRASONIC CORROSION SURVEY SUMMARY COMMENTS

SUMMARY COMMENTS FOR JOB# B07014							
Date	**LSD:**	**Drawing#:**	**TML#:**	**Vessel Name:**	**Regulatory#:**	**Serial:**	**Comments**
19.May.24	00-00-000-00W0M	13	25	Vertical Sand Filter	A0642032	ZR-114-12	
19.May.24	00-00-000-00W0M	13	30	Vertical Sand Filter	A0642032	ZR-114-12	
19.May.24	00-00-000-00W0M	13	35	Vertical Sand Filter	A0642032	ZR-114-12	
19.May.24	00-00-000-00W0M	13	40	Vertical Sand Filter	A0642032	ZR-114-12	
19.May.24	00-00-000-00W0M	13	45	Vertical Sand Filter	A0642032	ZR-114-12	
19.May.24	00-00-000-00W0M	13	50	Vertical Sand Filter	A0642032	ZR-114-12	
19.May.24	00-00-000-00W0M	14	05	Vertical Sand Filter	A0544169	ZR-103-10	
19.May.24	00-00-000-00W0M	14	10	Vertical Sand Filter	A0544169	ZR-103-10	
19.May.24	00-00-000-00W0M	14	15	Vertical Sand Filter	A0544169	ZR-103-10	
19.May.24	00-00-000-00W0M	14	20	Vertical Sand Filter	A0544169	ZR-103-10	
19.May.24	00-00-000-00W0M	14	25	Vertical Sand Filter	A0544169	ZR-103-10	
19.May.24	00-00-000-00W0M	14	30	Vertical Sand Filter	A0544169	ZR-103-10	
19.May.24	00-00-000-00W0M	14	35	Vertical Sand Filter	A0544169	ZR-103-10	
19.May.24	00-00-000-00W0M	14	40	Vertical Sand Filter	A0544169	ZR-103-10	
19.May.24	00-00-000-00W0M	14	45	Vertical Sand Filter	A0544169	ZR-103-10	
19.May.24	00-00-000-00W0M	14	50	Vertical Sand Filter	A0544169	ZR-103-10	
19.May.24	00-00-000-00W0M	15	05	Vertical Sand Filter	A0627713	ZR-110-11	
19.May.24	00-00-000-00W0M	15	10	Vertical Sand Filter	A0627713	ZR-110-11	
19.May.24	00-00-000-00W0M	15	15	Vertical Sand Filter	A0627713	ZR-110-11	
19.May.24	00-00-000-00W0M	15	20	Vertical Sand Filter	A0627713	ZR-110-11	
19.May.24	00-00-000-00W0M	15	25	Vertical Sand Filter	A0627713	ZR-110-11	

NRG PROCESS SOLUTIONS
ULTRASONIC CORROSION SURVEY SUMMARY COMMENTS

SUMMARY COMMENTS FOR JOB# B07014							
Date	**LSD:**	**Drawing#:**	**TML#:**	**Vessel Name:**	**Regulatory#:**	**Serial:**	**Comments**
19.May.24	00-00-000-00W0M	15	30	Vertical Sand Filter	A0627713	ZR-110-11	
19.May.24	00-00-000-00W0M	15	35	Vertical Sand Filter	A0627713	ZR-110-11	
19.May.24	00-00-000-00W0M	15	40	Vertical Sand Filter	A0627713	ZR-110-11	
19.May.24	00-00-000-00W0M	15	45	Vertical Sand Filter	A0627713	ZR-110-11	
19.May.24	00-00-000-00W0M	15	50	Vertical Sand Filter	A0627713	ZR-110-11	
19.May.24	00-00-000-00W0M	16	05	Pressure Tank	A0415414	02875	
19.May.24	00-00-000-00W0M	16	10	Pressure Tank	A0415414	02875	
19.May.24	00-00-000-00W0M	16	15	Pressure Tank	A0415414	02875	
19.May.24	00-00-000-00W0M	16	20	Pressure Tank	A0415414	02875	
19.May.24	00-00-000-00W0M	16	25	Pressure Tank	A0415414	02875	
19.May.24	00-00-000-00W0M	16	30	Pressure Tank	A0415414	02875	
19.May.24	00-00-000-00W0M	16	35	Pressure Tank	A0415414	02875	
19.May.24	00-00-000-00W0M	16	40	Pressure Tank	A0415414	02875	
19.May.24	00-00-000-00W0M	16	45	Pressure Tank	A0415414	02875	
19.May.24	00-00-000-00W0M	16	50	Pressure Tank	A0415414	02875	
19.May.24	00-00-000-00W0M	16	55	Pressure Tank	A0415414	02875	
19.May.24	00-00-000-00W0M	16	60	Pressure Tank	A0415414	02875	
19.May.24	00-00-000-00W0M	16	65	Pressure Tank	A0415414	02875	
19.May.24	00-00-000-00W0M	16	70	Pressure Tank	A0415414	02875	
19.May.24	00-00-000-00W0M	16	73	Pressure Tank	A0415414	02875	
19.May.24	00-00-000-00W0M	16	75	Pressure Tank	A0415414	02875	

NRG PROCESS SOLUTIONS
ULTRASONIC CORROSION SURVEY SUMMARY COMMENTS

SUMMARY COMMENTS FOR JOB# B07014							
Date	**LSD:**	**Drawing#:**	**TML#:**	**Vessel Name:**	**Regulatory#:**	**Serial:**	**Comments**
19.May.24	00-00-000-00W0M	16	80	Pressure Tank	A0415414	02875	
19.May.24	00-00-000-00W0M	16	85	Pressure Tank	A0415414	02875	
19.May.24	00-00-000-00W0M	16	87	Pressure Tank	A0415414	02875	
19.May.24	00-00-000-00W0M	16	90	Pressure Tank	A0415414	02875	
19.May.24	00-00-000-00W0M	16	95	Pressure Tank	A0415414	02875	
19.May.24	00-00-000-00W0M	16	97	Pressure Tank	A0415414	02875	
19.May.24	00-00-000-00W0M	17	05	Black Hurst Tank 6'x13	-		
19.May.24	00-00-000-00W0M	17	10	Black Hurst Tank 6'x13	-		
19.May.24	00-00-000-00W0M	17	15	Black Hurst Tank 6'x13	-		
19.May.24	00-00-000-00W0M	17	20	Black Hurst Tank 6'x13	-		
19.May.24	00-00-000-00W0M	17	25	Black Hurst Tank 6'x13	-		
19.May.24	00-00-000-00W0M	17	30	Black Hurst Tank 6'x13	-		
19.May.24	00-00-000-00W0M	17	35	Black Hurst Tank 6'x13	-		
19.May.24	00-00-000-00W0M	17	40	Black Hurst Tank 6'x13	-		PITTING & CORROSION
19.May.24	00-00-000-00W0M	17	45	Black Hurst Tank 6'x13	-		
19.May.24	00-00-000-00W0M	17	50	Black Hurst Tank 6'x13	-		
19.May.24	00-00-000-00W0M	17	55	Black Hurst Tank 6'x13	-		
19.May.24	00-00-000-00W0M	17	60	Black Hurst Tank 6'x13	-		
19.May.24	00-00-000-00W0M	17	65	Black Hurst Tank 6'x13	-		
19.May.24	00-00-000-00W0M	17	70	Black Hurst Tank 6'x13	-		
19.May.24	00-00-000-00W0M	18	05	Flare Knockout Drum	-	0100228DA	

NRG PROCESS SOLUTIONS
ULTRASONIC CORROSION SURVEY SUMMARY COMMENTS

SUMMARY COMMENTS FOR JOB# B07014							
Date	**LSD:**	**Drawing#:**	**TML#:**	**Vessel Name:**	**Regulatory#:**	**Serial:**	**Comments**
19.May.24	00-00-000-00W0M	18	10	Flare Knockout Drum	-	0100228DA	
19.May.24	00-00-000-00W0M	18	15	Flare Knockout Drum	-	0100228DA	
19.May.24	00-00-000-00W0M	18	25	Flare Knockout Drum	-	0100228DA	
19.May.24	00-00-000-00W0M	18	30	Flare Knockout Drum	-	0100228DA	
19.May.24	00-00-000-00W0M	18	35	Flare Knockout Drum	-	0100228DA	
19.May.24	00-00-000-00W0M	18	40	Flare Knockout Drum	-	0100228DA	
19.May.24	00-00-000-00W0M	18	45	Flare Knockout Drum	-	0100228DA	
19.May.24	00-00-000-00W0M	18	50	Flare Knockout Drum	-	0100228DA	
19.May.24	00-00-000-00W0M	18	55	Flare Knockout Drum	-	0100228DA	
19.May.24	00-00-000-00W0M	18	60	Flare Knockout Drum	-	0100228DA	
19.May.24	00-00-000-00W0M	18	65	Flare Knockout Drum	-	0100228DA	
19.May.24	00-00-000-00W0M	18	70	Flare Knockout Drum	-	0100228DA	
19.May.24	00-00-000-00W0M	18	75	Flare Knockout Drum	-	0100228DA	

Item: Pressure Tank - Vessel

Technician: Stephen Keeley
CGSB 48.9712 UT, MT LEVEL II
SNT UT, MT LEVEL II
12288

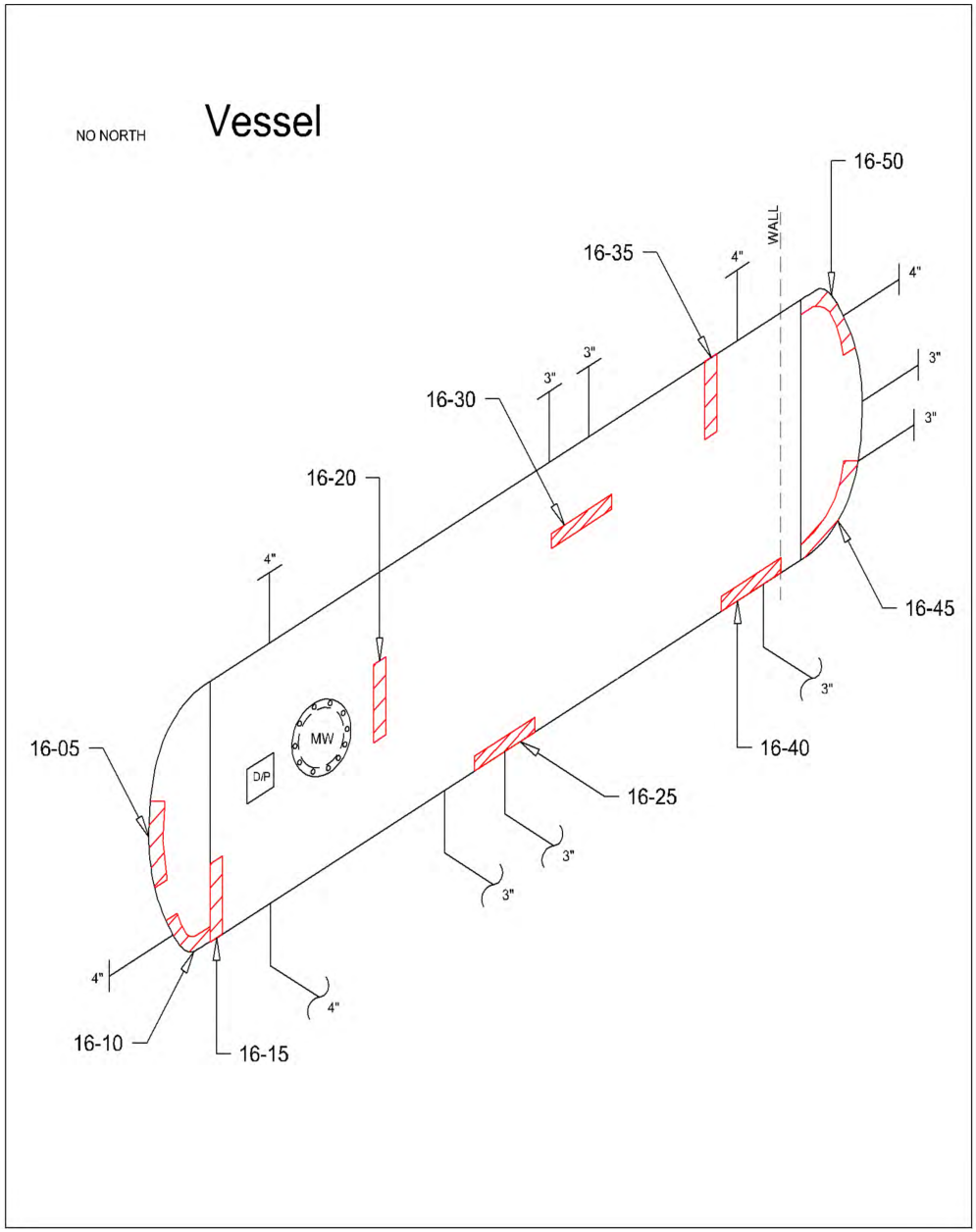

Client:	NRG PROCESS SOLUTIONS
LSD:	00-00-000-00W0M
Drawing#:	16
Location:	Thomas Chadwick Farm
Regulatory#:	**A0415414**
Serial:	02875
CRN#:	P2112.213
NB#:	
Date:	05.24.2019
Job#:	B07014

Item: Pressure Tank - Nozzle's

Technician: Stephen Keeley
CGSB 48.9712 UT, MT LEVEL II
SNT UT, MT LEVEL II
12288

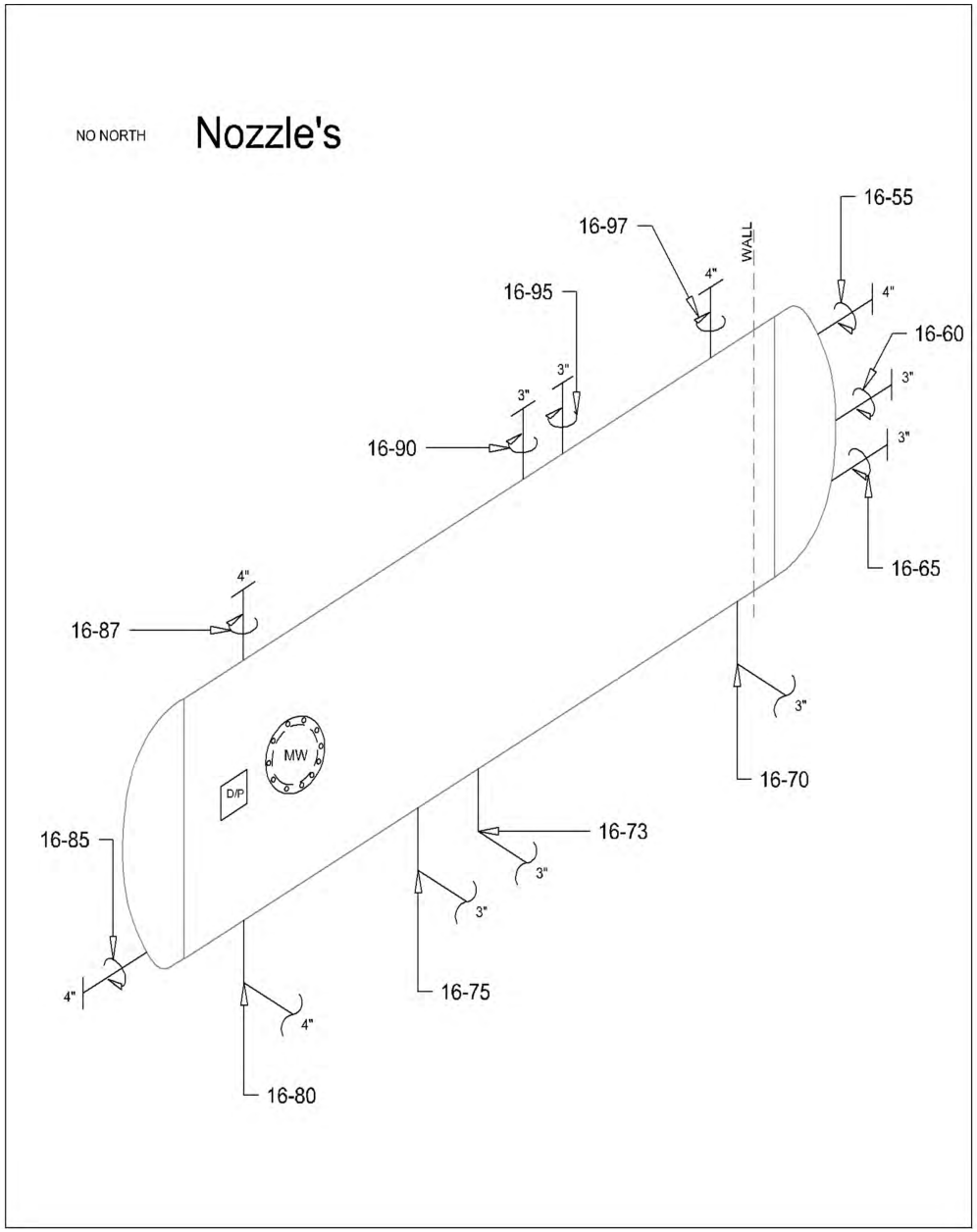

Client:	NRG PROCESS SOLUTIONS
LSD:	00-00-000-00W0M
Drawing#:	16A
Location:	Thomas Chadwick Farm
Regulatory#:	**A0415414**
Serial:	02875
CRN#:	P2112.213
NB#:	
Date:	05.24.2019
Job#:	B07014

NRG PROCESS SOLUTIONS - ULTRASONIC CORROSION SURVEY

HUNT INSPECTION LTD.

STATIC DATA

Date:	05.24.2019	**Vessel Name:**	Pressure Tank	**Vessel Shell Nom:**	0.625 in
LSD:	00-00-000-00W0M	**Regulatory#:**	**A0415414**	**Vessel Head Nom:**	0.625 in
Drawing#:	16 **Report#:** 6745	**Serial#:**	02875	**- Shell Nom:**	
Inspector:	Stephen Keeley	**CRN#:**	P2112.213	**- Head Nom:**	
Location:	Thomas Chadwick Farm	**NB#:**		**Shell Side MAWP:**	250 psi
District:	Halkirk	**Tag#:**	W.O. CES 652	**Shell Side MAWT:**	200 °F
Process:		**Year Built:**	2002	**Tube Side MAWP:**	
Skid#:	PT-252	**Manufacture:**	Dynacorp Fabrication Inc	**Tube Side MAWT:**	
UT Tech.:	UT 1-1, Rev 5	**Vessel CA:**	0.0625 in	**Radiography:**	RT-1
Surface Cond:	Smooth Painted	**Vessel OD:**	76 in	**Code Stamp:**	None
Surface Temp:	60 °F	**AB 506 Vessel Type:**	Well-head Vessels	**Orientation:**	Horizontal
Job#:	B07014	**Manway:**	Yes	**Insulated:**	NO
Vessel Comment:				**HT:**	Yes

TML 16-05

Type	Head
Shape	Ellipsoidal
Side	Shell
OD	76 in
Code	ASME Sec VIII, Div 1
Material	SA 516 - 70
Stress	20000 psi
Efficiency	1

UT SURVEY READINGS (in)

	Date	1	2	3	4	5	6
Baseline	May-19	0.599	0.599	0.598	0.604	0.602	0.603
Previous							
Current	May-19	0.599	0.599	0.598	0.604	0.602	0.603
Concerns		All Readings Acceptable					
Comments							

UT RESULT SUMMARY

Nominal	Minimum	Average	T-Min	CA
0.625 in	**0.598 in**	0.601 in	0.468 in	0.0625 in

UT ANALYSIS OF LOW MINIMUM READING

% Below Nom.	4.32	**Short Term C.R.**	
% Below C.A.	0.00	**Long Term C.R.**	
Below T-Min	NO	**Remaining Life**	
Int. Corrosion	NO	**Assumed Nominal**	NO
Int. Erosion	NO	**Assumed Material**	NO

TML 16-10

Type	Head
Shape	Ellipsoidal
Side	Shell
OD	76 in
Code	ASME Sec VIII, Div 1
Material	SA 516 - 70
Stress	20000 psi
Efficiency	1

UT SURVEY READINGS (in)

	Date	1	2	3	4	5	6
Baseline	May-19	0.605	0.598	0.593	0.590	0.589	0.614
Previous							
Current	May-19	0.605	0.598	0.593	0.590	0.589	0.614
Concerns		All Readings Acceptable					
Comments							

UT RESULT SUMMARY

Nominal	Minimum	Average	T-Min	CA
0.625 in	**0.589 in**	0.598 in	0.468 in	0.0625 in

UT ANALYSIS OF LOW MINIMUM READING

% Below Nom.	5.76	**Short Term C.R.**	
% Below C.A.	0.00	**Long Term C.R.**	
Below T-Min	NO	**Remaining Life**	
Int. Corrosion	NO	**Assumed Nominal**	NO
Int. Erosion	NO	**Assumed Material**	NO

TML 16-15

Type	Shell
Shape	Cylindrical
Side	Shell
OD	76 in
Code	ASME Sec VIII, Div 1
Material	SA 516 - 70
Stress	20000 psi
Efficiency	1

UT SURVEY READINGS (in)

	Date	1	2	3	4	5	6
Baseline	May-19	0.602	0.602	0.611	0.601	0.600	0.598
Previous							
Current	May-19	0.602	0.602	0.611	0.601	0.600	0.598
Concerns		All Readings Acceptable					
Comments							

UT RESULT SUMMARY

Nominal	Minimum	Average	T-Min	CA
0.625 in	**0.598 in**	0.602 in	0.471 in	0.0625 in

UT ANALYSIS OF LOW MINIMUM READING

% Below Nom.	4.32	**Short Term C.R.**	
% Below C.A.	0.00	**Long Term C.R.**	
Below T-Min	NO	**Remaining Life**	
Int. Corrosion	NO	**Assumed Nominal**	NO
Int. Erosion	NO	**Assumed Material**	NO

NRG PROCESS SOLUTIONS - ULTRASONIC CORROSION SURVEY

HUNT INSPECTION LTD.

STATIC DATA

Date:	05.24.2019	**Vessel Name:**	Pressure Tank	**Regulatory#:**	**A0415414**
LSD:	00-00-000-00W0M	**Location:**	Thomas Chadwick Farm	**Serial:**	02875
Drawing#:	16	**Job#:**	B07014	**CRN#:**	P2112.213

TML 16-20

Type	Shell
Shape	Cylindrical
Side	Shell
OD	76 in
Code	ASME Sec VIII, Div 1
Material	SA 516 - 70
Stress	20000 psi
Efficiency	1

UT SURVEY READINGS (in)

	Date	1	2	3	4	5	6
Baseline	May-19	0.609	0.616	0.616	0.608	0.605	0.606
Previous							
Current	May-19	0.609	0.616	0.616	0.608	0.605	0.606

Concerns All Readings Acceptable

Comments

UT RESULT SUMMARY

Nominal	Minimum	Average	T-Min	CA
0.625 in	**0.605 in**	0.610 in	0.471 in	0.0625 in

UT ANALYSIS OF LOW MINIMUM READING

% Below Nom.	3.20	**Short Term C.R.**	
% Below C.A.	0.00	**Long Term C.R.**	
Below T-Min	NO	**Remaining Life**	
Int. Corrosion	NO	**Assumed Nominal**	NO
Int. Erosion	NO	**Assumed Material**	NO

TML 16-25

Type	Shell
Shape	Cylindrical
Side	Shell
OD	76 in
Code	ASME Sec VIII, Div 1
Material	SA 516 - 70
Stress	20000 psi
Efficiency	1

UT SURVEY READINGS (in)

	Date	1	2	3	4	5	6
Baseline	May-19	0.611	0.607	0.614	0.611	0.610	0.613
Previous							
Current	May-19	0.611	0.607	0.614	0.611	0.610	0.613

Concerns All Readings Acceptable

Comments

UT RESULT SUMMARY

Nominal	Minimum	Average	T-Min	CA
0.625 in	**0.607 in**	0.611 in	0.471 in	0.0625 in

UT ANALYSIS OF LOW MINIMUM READING

% Below Nom.	2.88	**Short Term C.R.**	
% Below C.A.	0.00	**Long Term C.R.**	
Below T-Min	NO	**Remaining Life**	
Int. Corrosion	NO	**Assumed Nominal**	NO
Int. Erosion	NO	**Assumed Material**	NO

TML 16-30

Type	Shell
Shape	Cylindrical
Side	Shell
OD	76 in
Code	ASME Sec VIII, Div 1
Material	SA 516 - 70
Stress	20000 psi
Efficiency	1

UT SURVEY READINGS (in)

	Date	1	2	3	4	5	6
Baseline	May-19	0.599	0.601	0.598	0.600	0.596	0.596
Previous							
Current	May-19	0.599	0.601	0.598	0.600	0.596	0.596

Concerns All Readings Acceptable

Comments

UT RESULT SUMMARY

Nominal	Minimum	Average	T-Min	CA
0.625 in	**0.596 in**	0.598 in	0.471 in	0.0625 in

UT ANALYSIS OF LOW MINIMUM READING

% Below Nom.	4.64	**Short Term C.R.**	
% Below C.A.	0.00	**Long Term C.R.**	
Below T-Min	NO	**Remaining Life**	
Int. Corrosion	NO	**Assumed Nominal**	NO
Int. Erosion	NO	**Assumed Material**	NO

TML 16-35

Type	Shell
Shape	Cylindrical
Side	Shell
OD	76 in
Code	ASME Sec VIII, Div 1
Material	SA 516 - 70
Stress	20000 psi
Efficiency	1

UT SURVEY READINGS (in)

	Date	1	2	3	4	5	6
Baseline	May-19	0.606	0.604	0.593	0.593	0.596	0.597
Previous							
Current	May-19	0.606	0.604	0.593	0.593	0.596	0.597

Concerns All Readings Acceptable

Comments

UT RESULT SUMMARY

Nominal	Minimum	Average	T-Min	CA
0.625 in	**0.593 in**	0.598 in	0.471 in	0.0625 in

UT ANALYSIS OF LOW MINIMUM READING

% Below Nom.	5.12	**Short Term C.R.**	
% Below C.A.	0.00	**Long Term C.R.**	
Below T-Min	NO	**Remaining Life**	
Int. Corrosion	NO	**Assumed Nominal**	NO
Int. Erosion	NO	**Assumed Material**	NO

NRG PROCESS SOLUTIONS - ULTRASONIC CORROSION SURVEY

HUNT INSPECTION LTD.

STATIC DATA

Date:	05.24.2019	**Vessel Name:**	Pressure Tank	**Regulatory#:**	**A0415414**
LSD:	00-00-000-00W0M	**Location:**	Thomas Chadwick Farm	**Serial:**	02875
Drawing#:	16	**Job#:**	B07014	**CRN#:**	P2112.213

TML 16-40

Type	Shell	**Date**		1	2	3	4	5	6	
Shape	Cylindrical	May-19	**Baseline**	0.594	0.582	0.553	0.552	0.572	0.589	
Side	Shell		**Previous**							
OD	76 in	May-19	**Current**	0.594	0.582	0.553	0.552	0.572	0.589	
Code	ASME Sec VIII, Div 1		**Concerns**	Low Reading 1.9% Below CA						
Material	SA 516 - 70									
Stress	20000 psi									
Efficiency	1		**Comments**							

UT SURVEY READINGS (in)

UT RESULT SUMMARY

Nominal	Minimum	Average	T-Min	CA
0.625 in	**0.552 in**	0.574 in	0.471 in	0.0625 in

UT ANALYSIS OF LOW MINIMUM READING

% Below Nom.	11.68	**Short Term C.R.**	
% Below C.A.	1.87	**Long Term C.R.**	
Below T-Min	NO	**Remaining Life**	
Int. Corrosion	NO	**Assumed Nominal**	NO
Int. Erosion	NO	**Assumed Material**	NO

TML 16-45

Type	Head	**Date**		1	2	3	4	5	6	
Shape	Ellipsoidal	May-19	**Baseline**	0.593	0.576	0.576	0.561	0.566	0.578	
Side	Shell		**Previous**							
OD	76 in	May-19	**Current**	0.593	0.576	0.576	0.561	0.566	0.578	
Code	ASME Sec VIII, Div 1		**Concerns**	Low Reading 0.3% Below CA						
Material	SA 516 - 70									
Stress	20000 psi									
Efficiency	1		**Comments**							

UT SURVEY READINGS (in)

UT RESULT SUMMARY

Nominal	Minimum	Average	T-Min	CA
0.625 in	**0.561 in**	0.575 in	0.468 in	0.0625 in

UT ANALYSIS OF LOW MINIMUM READING

% Below Nom.	10.24	**Short Term C.R.**	
% Below C.A.	0.27	**Long Term C.R.**	
Below T-Min	NO	**Remaining Life**	
Int. Corrosion	NO	**Assumed Nominal**	NO
Int. Erosion	NO	**Assumed Material**	NO

TML 16-50

Type	Head	**Date**		1	2	3	4	5	6	
Shape	Ellipsoidal	May-19	**Baseline**	0.608	0.608	0.612	0.612	0.621	0.611	
Side	Shell		**Previous**							
OD	76 in	May-19	**Current**	0.608	0.608	0.612	0.612	0.621	0.611	
Code	ASME Sec VIII, Div 1		**Concerns**	All Readings Acceptable						
Material	SA 516 - 70									
Stress	20000 psi									
Efficiency	1		**Comments**							

UT SURVEY READINGS (in)

UT RESULT SUMMARY

Nominal	Minimum	Average	T-Min	CA
0.625 in	**0.608 in**	0.612 in	0.468 in	0.0625 in

UT ANALYSIS OF LOW MINIMUM READING

% Below Nom.	2.72	**Short Term C.R.**	
% Below C.A.	0.00	**Long Term C.R.**	
Below T-Min	NO	**Remaining Life**	
Int. Corrosion	NO	**Assumed Nominal**	NO
Int. Erosion	NO	**Assumed Material**	NO

TML 16-55

Type	Nozzle	**Date**		1	2	3	4	5	6	
Shape	Cylindrical	May-19	**Baseline**	0.629	0.629	0.647	0.633	0.620	0.619	
Side	Shell		**Previous**							
OD	4.5 in SCH XXS	May-19	**Current**	0.629	0.629	0.647	0.633	0.620	0.619	
Code	ASME Sec VIII, Div 1		**Concerns**	All Readings Acceptable						
Material	SA 106 - B									
Stress	17100 psi									
Efficiency	1		**Comments**							

UT SURVEY READINGS (in)

UT RESULT SUMMARY

Nominal	Minimum	Average	T-Min	CA
0.674 in	**0.619 in**	0.630 in	0.023 in	0.0625 in

UT ANALYSIS OF LOW MINIMUM READING

% Below Nom.	8.16	**Short Term C.R.**	
% Below C.A.	0.00	**Long Term C.R.**	
Below T-Min	NO	**Remaining Life**	
Int. Corrosion	NO	**Assumed Nominal**	NO
Int. Erosion	NO	**Assumed Material**	NO

NRG PROCESS SOLUTIONS - ULTRASONIC CORROSION SURVEY

HUNT INSPECTION LTD.

STATIC DATA

Date:	05.24.2019	**Vessel Name:**	Pressure Tank	**Regulatory#:**	**A0415414**
LSD:	00-00-000-00W0M	**Location:**	Thomas Chadwick Farm	**Serial:**	02875
Drawing#:	16	**Job#:**	B07014	**CRN#:**	P2112.213

TML 16-60

Type	Nozzle	**Date**		1	2	3	4	5	6		
Shape	Cylindrical	May-19	**Baseline**	0.599	0.607	0.599	0.606	0.596	0.594		
Side	Shell		**Previous**								
OD	3.5 in SCH XXS	May-19	**Current**	0.599	0.607	0.599	0.606	0.596	0.594		
Code	ASME Sec VIII, Div 1		**Concerns**	All Readings Acceptable							
Material	SA 106 - B										
Stress	17100 psi										
Efficiency	1		**Comments**								

UT SURVEY READINGS (in)

UT RESULT SUMMARY

Nominal	Minimum	Average	T-Min	CA
0.600 in	**0.594 in**	0.600 in	0.017 in	0.0625 in

UT ANALYSIS OF LOW MINIMUM READING

% Below Nom.	1.00	**Short Term C.R.**	
% Below C.A.	0.00	**Long Term C.R.**	
Below T-Min	NO	**Remaining Life**	
Int. Corrosion	NO	**Assumed Nominal**	NO
Int. Erosion	NO	**Assumed Material**	NO

TML 16-65

Type	Nozzle	**Date**		1	2	3	4	5	6		
Shape	Cylindrical	May-19	**Baseline**	0.589	0.595	0.590	0.558	0.605	0.597		
Side	Shell		**Previous**								
OD	3.5 in SCH XXS	May-19	**Current**	0.589	0.595	0.590	0.558	0.605	0.597		
Code	ASME Sec VIII, Div 1		**Concerns**	All Readings Acceptable							
Material	SA 106 - B										
Stress	17100 psi										
Efficiency	1		**Comments**								

UT SURVEY READINGS (in)

UT RESULT SUMMARY

Nominal	Minimum	Average	T-Min	CA
0.600 in	**0.558 in**	0.589 in	0.017 in	0.0625 in

UT ANALYSIS OF LOW MINIMUM READING

% Below Nom.	7.00	**Short Term C.R.**	
% Below C.A.	0.00	**Long Term C.R.**	
Below T-Min	NO	**Remaining Life**	
Int. Corrosion	NO	**Assumed Nominal**	NO
Int. Erosion	NO	**Assumed Material**	NO

TML 16-70

Type	Nozzle	**Date**		1	2	3	4	5	6		
Shape	90° Elbow	May-19	**Baseline**	0.599	0.579	0.569	0.572	0.571	0.624		
Side	Shell		**Previous**								
OD	3.5 in SCH XXS	May-19	**Current**	0.599	0.579	0.569	0.572	0.571	0.624		
Code	ASME Sec VIII, Div 1		**Concerns**	All Readings Acceptable							
Material	SA 234 - WPB										
Stress	17100 psi										
Efficiency	1		**Comments**								

UT SURVEY READINGS (in)

UT RESULT SUMMARY

Nominal	Minimum	Average	T-Min	CA
0.600 in	**0.569 in**	0.586 in	0.017 in	0.0625 in

UT ANALYSIS OF LOW MINIMUM READING

% Below Nom.	5.17	**Short Term C.R.**	
% Below C.A.	0.00	**Long Term C.R.**	
Below T-Min	NO	**Remaining Life**	
Int. Corrosion	NO	**Assumed Nominal**	NO
Int. Erosion	NO	**Assumed Material**	NO

TML 16-73

Type	Nozzle	**Date**		1	2	3	4	5	6		
Shape	90° Elbow	May-19	**Baseline**	0.650	0.622	0.612	0.607	0.615	0.625		
Side	Shell		**Previous**								
OD	3.5 in SCH XXS	May-19	**Current**	0.650	0.622	0.612	0.607	0.615	0.625		
Code	ASME Sec VIII, Div 1		**Concerns**	All Readings Acceptable							
Material	SA 234 - WPB										
Stress	17100 psi										
Efficiency	1		**Comments**								

UT SURVEY READINGS (in)

UT RESULT SUMMARY

Nominal	Minimum	Average	T-Min	CA
0.600 in	**0.607 in**	0.622 in	0.017 in	0.0625 in

UT ANALYSIS OF LOW MINIMUM READING

% Below Nom.	0.00	**Short Term C.R.**	
% Below C.A.	0.00	**Long Term C.R.**	
Below T-Min	NO	**Remaining Life**	
Int. Corrosion	NO	**Assumed Nominal**	NO
Int. Erosion	NO	**Assumed Material**	NO

NRG PROCESS SOLUTIONS - ULTRASONIC CORROSION SURVEY

HUNT INSPECTION LTD.

STATIC DATA

Date:	05.24.2019	**Vessel Name:**	Pressure Tank	**Regulatory#:**	**A0415414**
LSD:	00-00-000-00W0M	**Location:**	Thomas Chadwick Farm	**Serial:**	02875
Drawing#:	16	**Job#:**	B07014	**CRN#:**	P2112.213

TML 16-75

Type	Nozzle	**Date**		1	2	3	4	5	6		
Shape	90° Elbow	May-19	**Baseline**	0.625	0.615	0.615	0.593	0.615	0.650		
Side	Shell		**Previous**								
OD	3.5 in SCH XXS	May-19	**Current**	0.625	0.615	0.615	0.593	0.615	0.650		
Code	ASME Sec VIII, Div 1		**Concerns**	All Readings Acceptable							
Material	SA 234 - WPB										
Stress	17100 psi										
Efficiency	1		**Comments**								

UT SURVEY READINGS (in)

UT RESULT SUMMARY

Nominal	Minimum	Average	T-Min	CA
0.600 in	**0.593 in**	0.619 in	0.017 in	0.0625 in

UT ANALYSIS OF LOW MINIMUM READING

% Below Nom.	1.17	**Short Term C.R.**	
% Below C.A.	0.00	**Long Term C.R.**	
Below T-Min	NO	**Remaining Life**	
Int. Corrosion	NO	**Assumed Nominal**	NO
Int. Erosion	NO	**Assumed Material**	NO

TML 16-80

Type	Nozzle	**Date**		1	2	3	4	5	6		
Shape	90° Elbow	May-19	**Baseline**	0.673	0.637	0.629	0.623	0.628	0.665		
Side	Shell		**Previous**								
OD	4.5 in SCH XXS	May-19	**Current**	0.673	0.637	0.629	0.623	0.628	0.665		
Code	ASME Sec VIII, Div 1		**Concerns**	All Readings Acceptable							
Material	SA 234 - WPB										
Stress	17100 psi										
Efficiency	1		**Comments**								

UT SURVEY READINGS (in)

UT RESULT SUMMARY

Nominal	Minimum	Average	T-Min	CA
0.674 in	**0.623 in**	0.642 in	0.023 in	0.0625 in

UT ANALYSIS OF LOW MINIMUM READING

% Below Nom.	7.57	**Short Term C.R.**	
% Below C.A.	0.00	**Long Term C.R.**	
Below T-Min	NO	**Remaining Life**	
Int. Corrosion	NO	**Assumed Nominal**	NO
Int. Erosion	NO	**Assumed Material**	NO

TML 16-85

Type	Nozzle	**Date**		1	2	3	4	5	6		
Shape	Cylindrical	May-19	**Baseline**	0.642	0.651	0.642	0.638	0.645	0.660		
Side	Shell		**Previous**								
OD	4.5 in SCH XXS	May-19	**Current**	0.642	0.651	0.642	0.638	0.645	0.660		
Code	ASME Sec VIII, Div 1		**Concerns**	All Readings Acceptable							
Material	SA 106 - B										
Stress	17100 psi										
Efficiency	1		**Comments**								

UT SURVEY READINGS (in)

UT RESULT SUMMARY

Nominal	Minimum	Average	T-Min	CA
0.674 in	**0.638 in**	0.646 in	0.023 in	0.0625 in

UT ANALYSIS OF LOW MINIMUM READING

% Below Nom.	5.34	**Short Term C.R.**	
% Below C.A.	0.00	**Long Term C.R.**	
Below T-Min	NO	**Remaining Life**	
Int. Corrosion	NO	**Assumed Nominal**	NO
Int. Erosion	NO	**Assumed Material**	NO

TML 16-87

Type	Nozzle	**Date**		1	2	3	4	5	6		
Shape	Cylindrical	May-19	**Baseline**	0.635	0.624	0.624	0.637	0.628	0.639		
Side	Shell		**Previous**								
OD	4.5 in SCH XXS	May-19	**Current**	0.635	0.624	0.624	0.637	0.628	0.639		
Code	ASME Sec VIII, Div 1		**Concerns**	All Readings Acceptable							
Material	SA 106 - B										
Stress	17100 psi										
Efficiency	1		**Comments**								

UT SURVEY READINGS (in)

UT RESULT SUMMARY

Nominal	Minimum	Average	T-Min	CA
0.674 in	**0.624 in**	0.631 in	0.023 in	0.0625 in

UT ANALYSIS OF LOW MINIMUM READING

% Below Nom.	7.42	**Short Term C.R.**	
% Below C.A.	0.00	**Long Term C.R.**	
Below T-Min	NO	**Remaining Life**	
Int. Corrosion	NO	**Assumed Nominal**	NO
Int. Erosion	NO	**Assumed Material**	NO

NRG PROCESS SOLUTIONS - ULTRASONIC CORROSION SURVEY

HUNT INSPECTION LTD.

STATIC DATA

Date:	05.24.2019	**Vessel Name:**	Pressure Tank	**Regulatory#:**	**A0415414**
LSD:	00-00-000-00W0M	**Location:**	Thomas Chadwick Farm	**Serial:**	02875
Drawing#:	16	**Job#:**	B07014	**CRN#:**	P2112.213

TML 16-90

Type	Nozzle	**Date**		1	2	3	4	5	6	**Nominal**	**Minimum**
Shape	Cylindrical	May-19	**Baseline**	0.569	0.576	0.572	0.594	0.604	0.597	0.600 in	**0.569 in**
Side	Shell		**Previous**								
OD	3.5 in SCH XXS	May-19	**Current**	0.569	0.576	0.572	0.594	0.604	0.597		
Code	ASME Sec VIII, Div 1		**Concerns**	All Readings Acceptable							
Material	SA 106 - B										
Stress	17100 psi										
Efficiency	1		**Comments**								

UT SURVEY READINGS (in)

UT RESULT SUMMARY

Average	T-Min	CA
0.585 in	0.017 in	0.0625 in

UT ANALYSIS OF LOW MINIMUM READING

% Below Nom.	5.17	**Short Term C.R.**	
% Below C.A.	0.00	**Long Term C.R.**	
Below T-Min	NO	**Remaining Life**	
Int. Corrosion	NO	**Assumed Nominal**	NO
Int. Erosion	NO	**Assumed Material**	NO

TML 16-95

Type	Nozzle	**Date**		1	2	3	4	5	6	**Nominal**	**Minimum**
Shape	Cylindrical	May-19	**Baseline**	0.622	0.597	0.599	0.607	0.605	0.605	0.600 in	**0.597 in**
Side	Shell		**Previous**								
OD	3.5 in SCH XXS	May-19	**Current**	0.622	0.597	0.599	0.607	0.605	0.605		
Code	ASME Sec VIII, Div 1		**Concerns**	All Readings Acceptable							
Material	SA 106 - B										
Stress	17100 psi										
Efficiency	1		**Comments**								

UT SURVEY READINGS (in)

UT RESULT SUMMARY

Average	T-Min	CA
0.606 in	0.017 in	0.0625 in

UT ANALYSIS OF LOW MINIMUM READING

% Below Nom.	0.50	**Short Term C.R.**	
% Below C.A.	0.00	**Long Term C.R.**	
Below T-Min	NO	**Remaining Life**	
Int. Corrosion	NO	**Assumed Nominal**	NO
Int. Erosion	NO	**Assumed Material**	NO

TML 16-97

Type	Nozzle	**Date**		1	2	3	4	5	6	**Nominal**	**Minimum**
Shape	Cylindrical	May-19	**Baseline**	0.654	0.666	0.667	0.668	0.654	0.641	0.674 in	**0.641 in**
Side	Shell		**Previous**								
OD	4.5 in SCH XXS	May-19	**Current**	0.654	0.666	0.667	0.668	0.654	0.641		
Code	ASME Sec VIII, Div 1		**Concerns**	All Readings Acceptable							
Material	SA 106 - B										
Stress	17100 psi										
Efficiency	1		**Comments**								

UT SURVEY READINGS (in)

UT RESULT SUMMARY

Average	T-Min	CA
0.658 in	0.023 in	0.0625 in

UT ANALYSIS OF LOW MINIMUM READING

% Below Nom.	4.90	**Short Term C.R.**	
% Below C.A.	0.00	**Long Term C.R.**	
Below T-Min	NO	**Remaining Life**	
Int. Corrosion	NO	**Assumed Nominal**	NO
Int. Erosion	NO	**Assumed Material**	NO